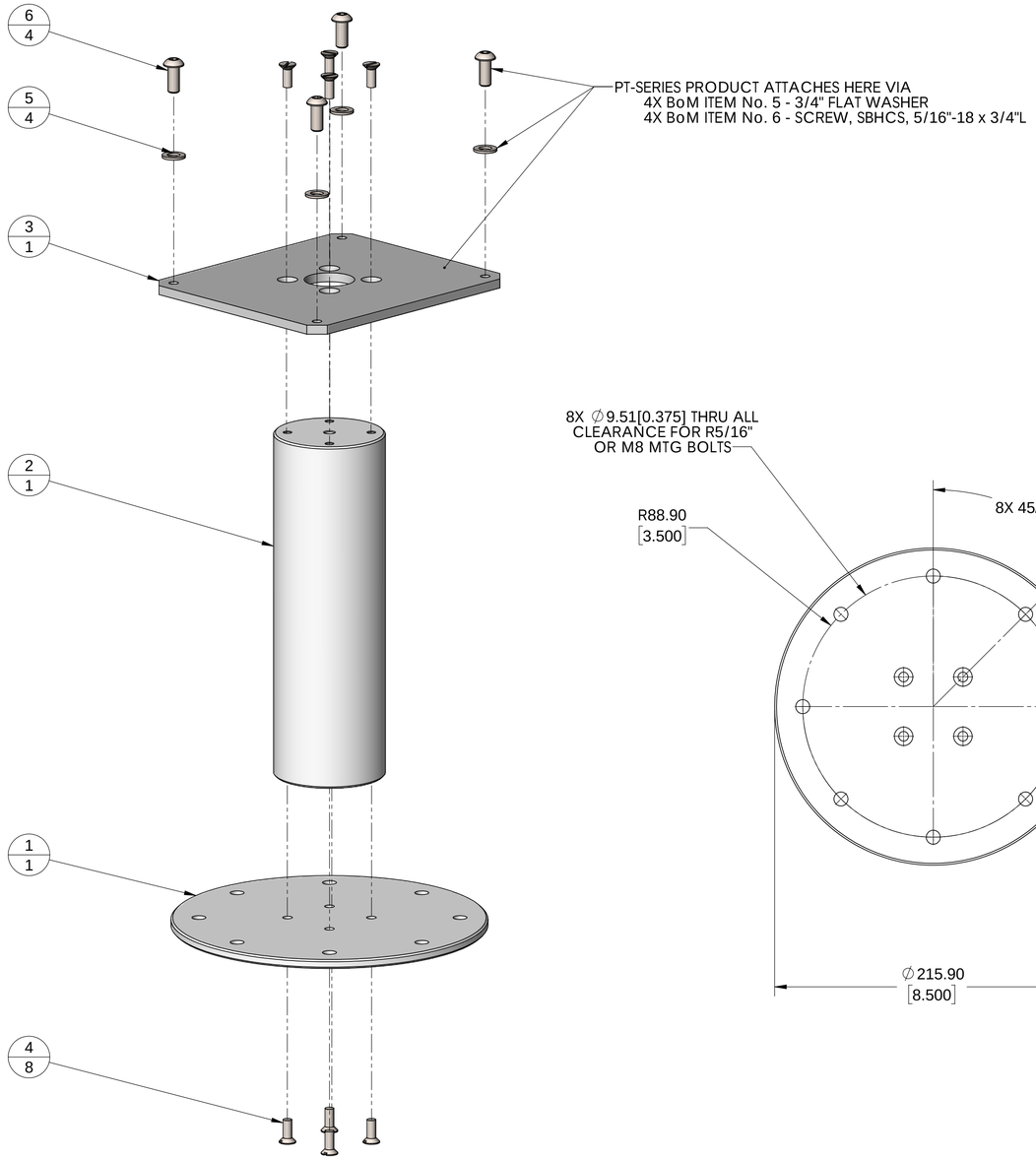

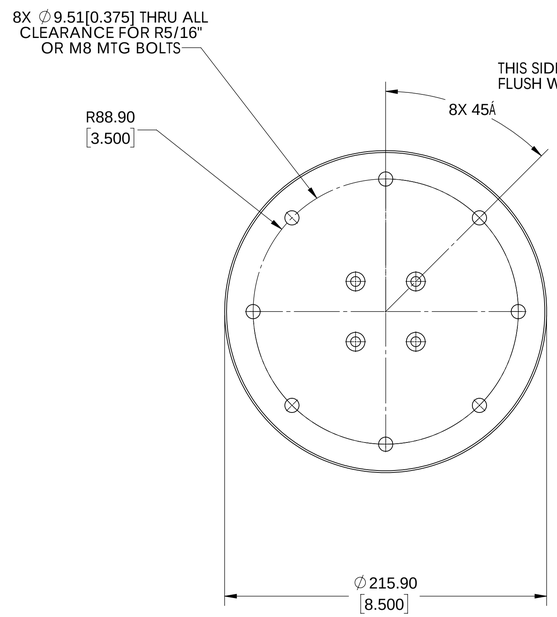

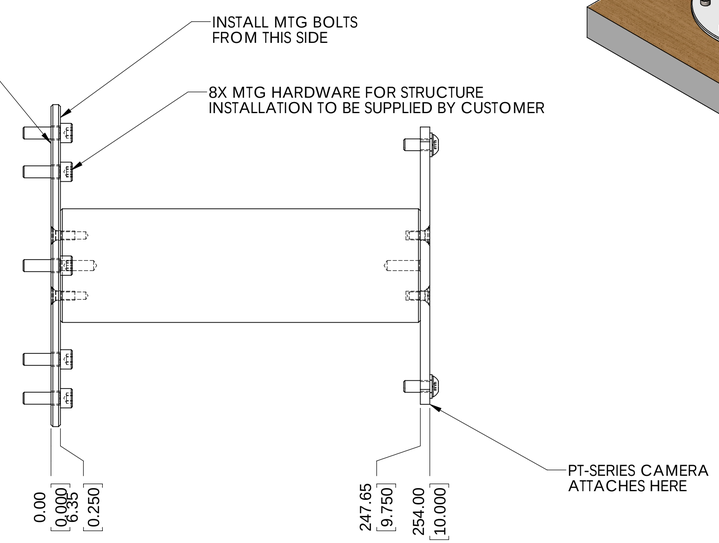

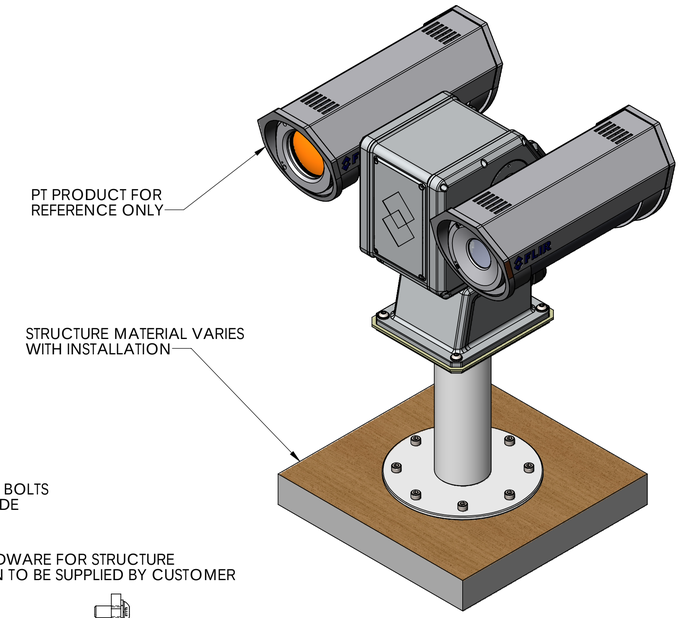

QTY.	PART NUMBER	DESCRIPTION	ITEM
4		SCREW, SBHCS, 5/16"-18 x 3/4" L	6
4		WASHER, FLAT, 5/16"	5
8		SCREW, FHCS M6 x 16 st stl	4
1	4119468	Adapter Plate - PT-Series	3
1	261-2887-00	Pedestal Mount, Post - PT-Series	2
1	261-2888-00	Pedestal Mount, Base Flange - PT-Series	1

Pedestal Mount Assy
PT-Series

METRIC

PROPRIETARY - FLIR SYSTEMS, INC.

THIS DOCUMENT IS CONTROLLED TO FLIR TECHNOLOGY LEVEL 2. THE INFORMATION CONTAINED IN THIS DOCUMENT PERTAINS TO A DUAL USE PRODUCT CONTROLLED FOR EXPORT BY THE EXPORT ADMINISTRATION REGULATIONS (EAR). DIVERSION CONTRARY TO US LAW IS PROHIBITED.
US DEPARTMENT OF COMMERCE AUTHORIZATION IS NOT REQUIRED PRIOR TO EXPORT OR TRANSFER TO FOREIGN PERSONS OR PARTIES UNLESS OTHERWISE PROHIBITED.

FLIR Systems, Inc.
6769 Hollister Ave.
Goleta, CA 93117

SIZE	CAGE	PIECE PART	REV
D	064Y2	500-1117-00	A

SCALE 1:2 | PRINTED: 5/29/2018 | SHEET 5 OF 10

SOLIDWORKS MODEL: 500-1117-00 Pedestal Mount Assy - PT-Series
MODEL REVISON: A

Pedestal Mount Assy - PT-Series
(PN 500-1117-00)
INSTALLATION

DWG NO. 500-1117-00 SH 5 REV A