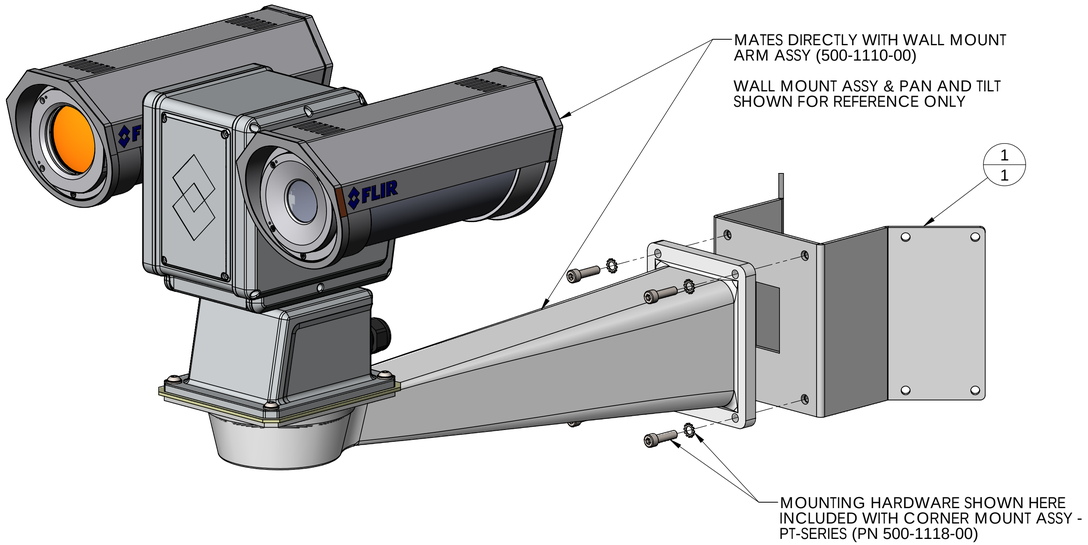

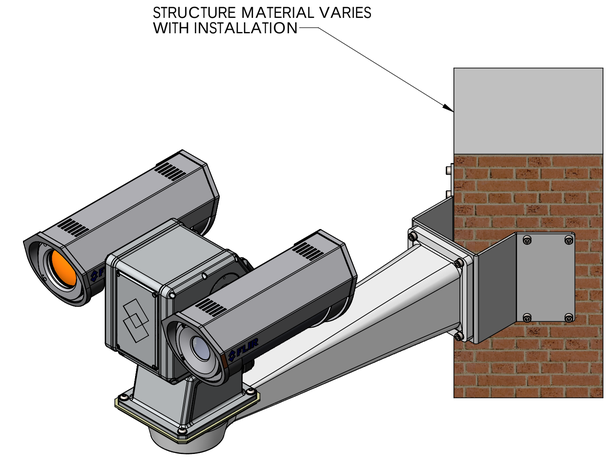

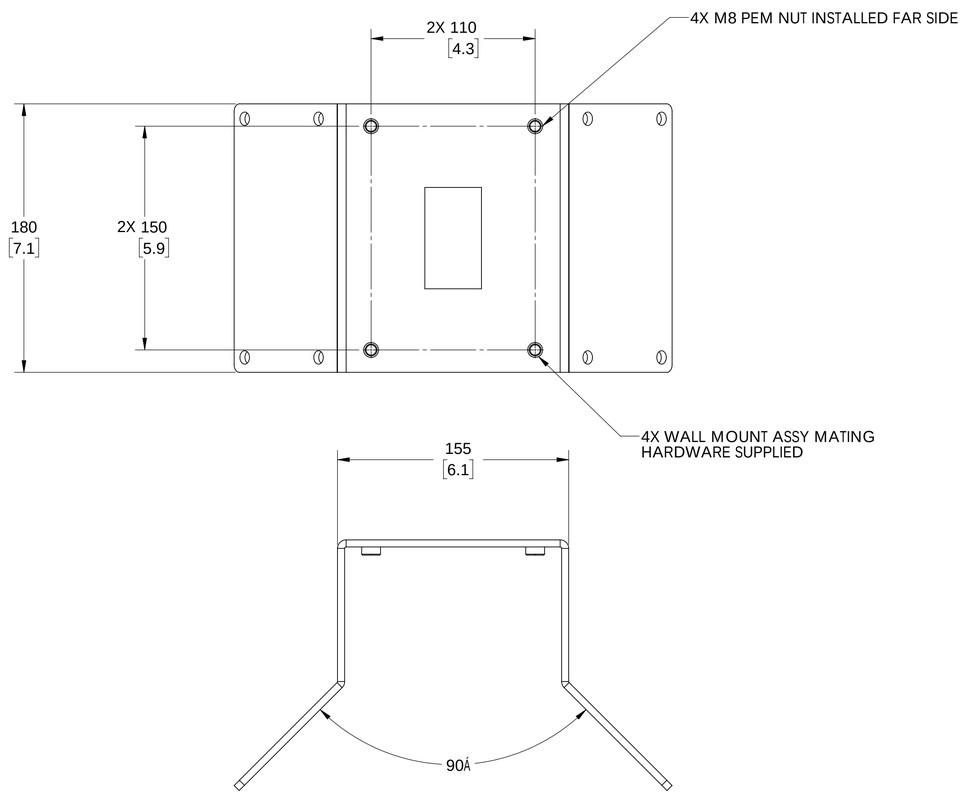

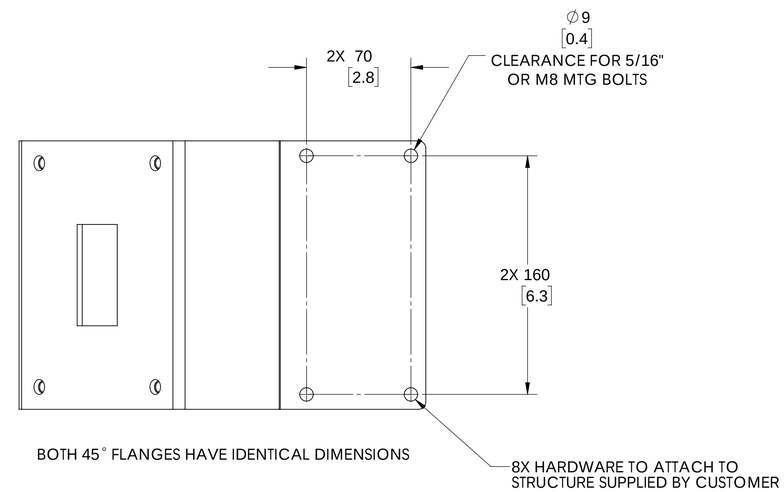

1	4215695	Corner Mount Adapter - PT-Series	1
With Mounting Arm/QTY.	PART NUMBER	DESCRIPTION	ITEM

Corner Mount Assy
PT-Series

METRIC

PROPRIETARY - FLIR SYSTEMS, INC.

THIS DOCUMENT IS CONTROLLED TO FLIR TECHNOLOGY LEVEL 2. THE INFORMATION CONTAINED IN THIS DOCUMENT PERTAINS TO A DUAL USE PRODUCT CONTROLLED FOR EXPORT BY THE EXPORT ADMINISTRATION REGULATIONS (EAR). DIVERSION CONTRARY TO US LAW IS PROHIBITED.
US DEPARTMENT OF COMMERCE AUTHORIZATION IS NOT REQUIRED PRIOR TO EXPORT OR TRANSFER TO FOREIGN PERSONS OR PARTIES UNLESS OTHERWISE PROHIBITED.

FLIR Systems, Inc.
6769 Hollister Ave.
Goleta, CA 93117

SIZE	CAGE	PIECE PART	REV
D	064Y2	500-1118-00	A

SCALE 1:2 | PRINTED: 5/29/2018 | SHEET 6 OF 10

SOLIDWORKS MODEL: 500-1118-00 Corner Mount Assy - PT-Series
MODEL REVISON: A

Corner Mount Assy - PT-Series
(PN 500-1118-00)
INSTALLATION

DWG NO. 500-1118-00 SH 6 REV A